# CLIFF

# 30A. TERMINAL TP44

**CL15941 - TP44 BLACK**
**CL15941A - TP44 BLACK ASSEMBLED**

**CL15942 - TP44 RED**
**CL15942A - TP44 RED ASSEMBLED**

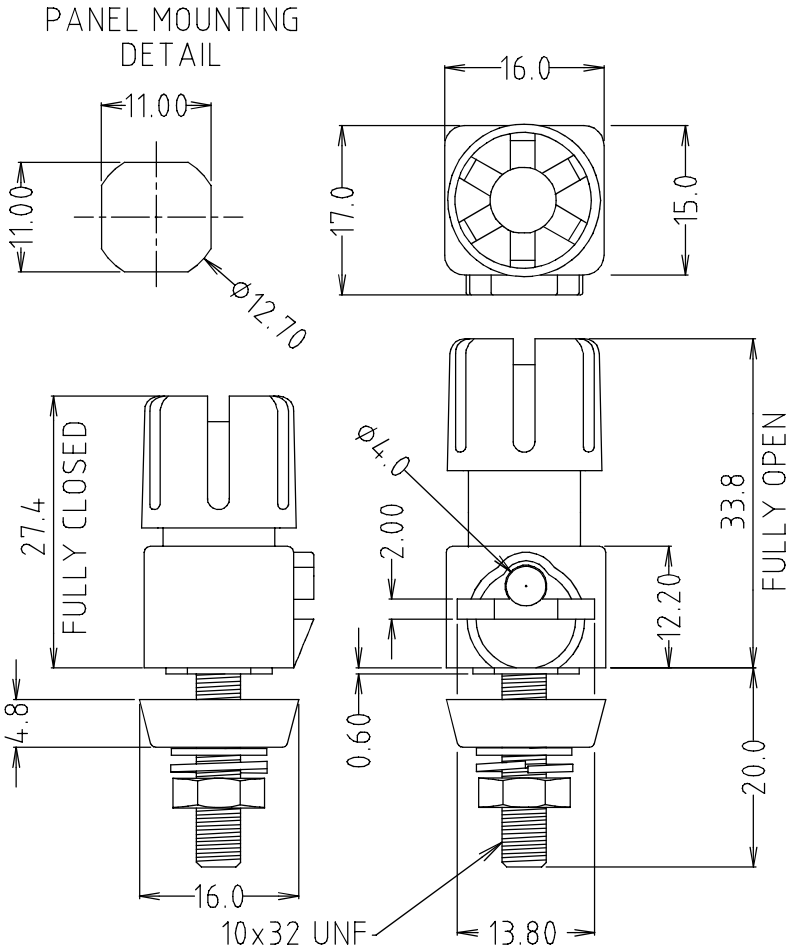


## Specification

Maximum Current: 30A.
Contact Resistance: Nickel <30mΩ,
Temperature Rating: -20°C to +80°C
Flammability: Minimum UL 94HB

© CLIFF 07/2021 ISS.3

For further information, contact sales@cliffuk.co.uk

**Cliff Electronic Components Limited**,
76 Holmethorpe Avenue, Holmethorpe Ind. Estate,
Redhill, Surrey RH1 2PF U.K.
Tel: +44 (0)1737 771375 Fax: +44 (0)1737 766012

www.cliffuk.co.uk

✓RoHS