KNOB K6C

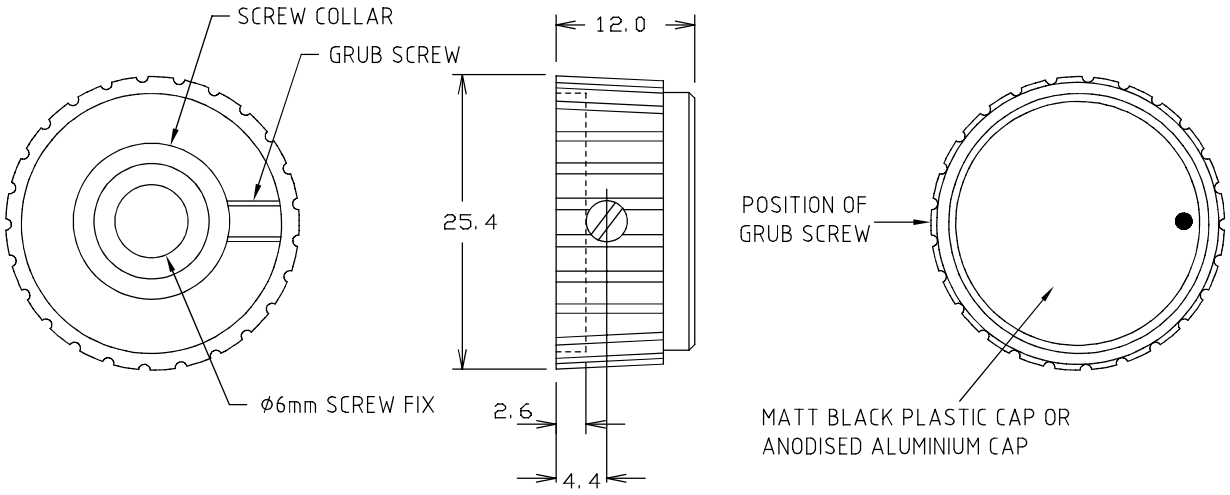

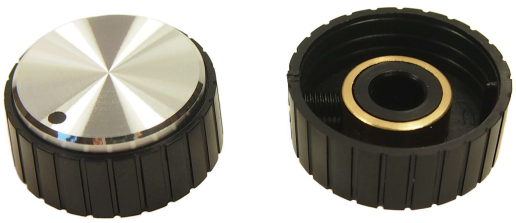

FC16782 - K6C BLACK 6mm Screw Fix, Aluminium Cap with marker dot.



FC16876 - K6C BLACK 6mm Screw Fix, Black cap with marker dot.

© CLIFF 10/2026 ISS.1

For further information, contact sales@cliffuk.co.uk

Cliff Electronic Components Limited,
76 Holmethorpe Avenue, Holmethorpe Ind. Estate,
Redhill, Surrey RH1 2PF U.K.
Tel: +44 (0)1737 771375 Fax: +44 (0)1737 766012

www.cliffuk.co.uk

✓RoHS