ISS	AMEND	DATE
1	Ist DRAWN	02/02/01
2	LEG LENGTH	02/02/01
3	SCHEMATIC ADD	15/02/02
4	ISSUED AS CL	14/03/08
5	ISSUED AS S1	25/06/09

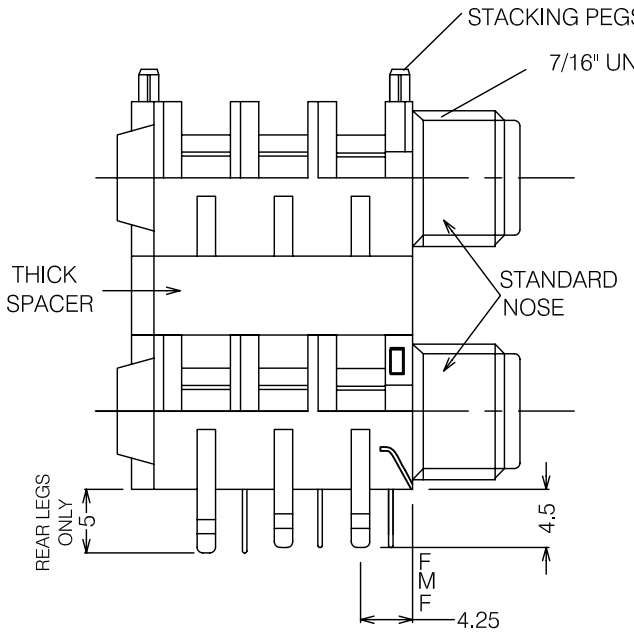

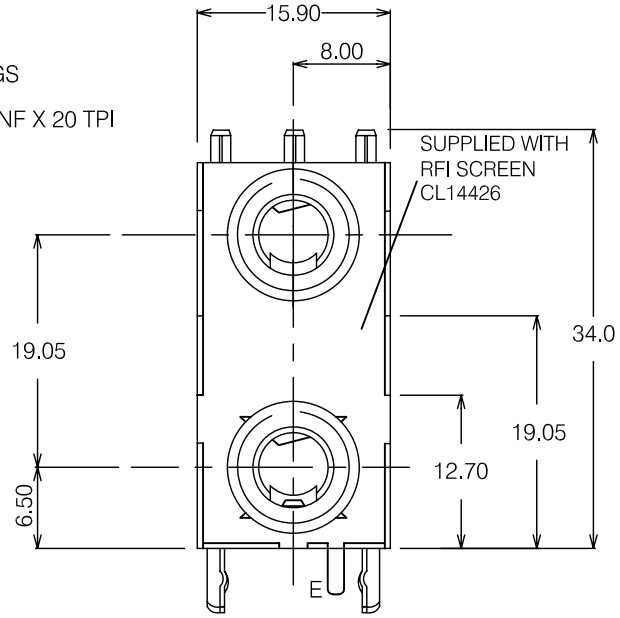

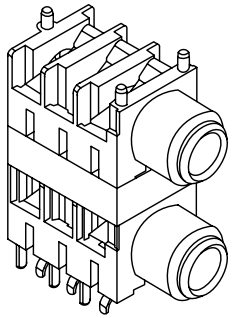

SCHEMATIC

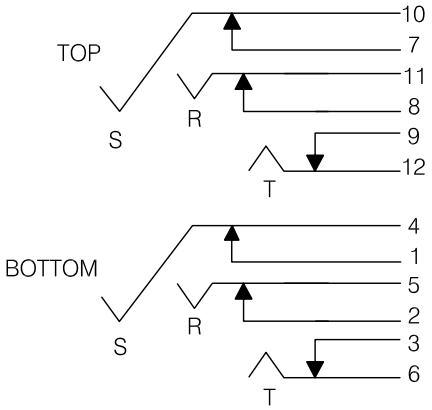

SWITCH CONTACTS OPEN WHEN PLUG IS INSERTED, CLOSE WHEN PLUG IS WITHDRAWN.

REFORM PROBE TAG AFTER FITTING RFI SCREEN TO ENSURE CONTACT WITH PLUG

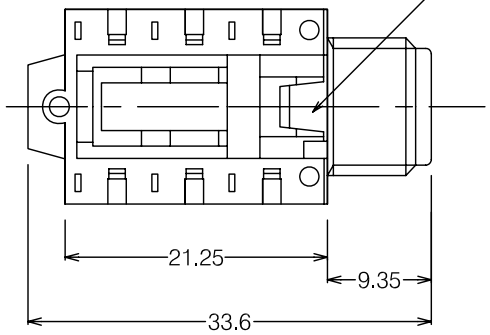

SUPPLIED WITHOUT NUT
TRAY PACKING 100/TRAY

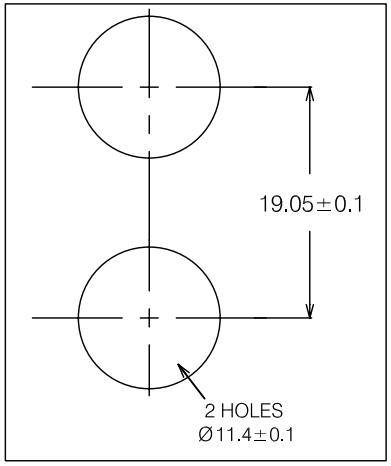

PANEL CUTOUT DETAIL

PC LAYOUT
(COMPONENT SIDE)

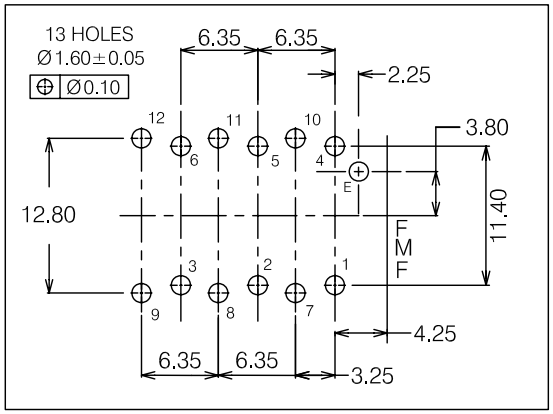

RoHS COMPLIANT

Tolerance

NO DEC. PLACE ±1.0
1 DEC. PLACE ±0.5
2 DEC. PLACE ±0.1
DIA. HOLES ±0.1
ANGLES ±1/2°
UNLESS OTHERWISE STATED

WHERE USED F.R.

DIMENSIONS IN MILLIMETERS UNLESS OTHERWISE STATED. WORK TO DIMENSIONS. DO NOT SCALE DRAWING. 3rd ANGLE PROJECTION. REMOVE BURRS. IF IN DOUBT ASK.

SCALE N.T.S.

CLIFF

MATERIAL: COMPOSITE
FINISH: CLEAN
DRAWN: XHZ
APPD : PCS

TITLE: STACK JACK S1C/SH/BBB X2 + CL14426 NN

DRWG NO : S1-1125W

FORM:A4DRWGH