ISS	AMEND	DATE
1	Ist DRAWN	13/07/08
2	DIM.REVISED	05/01/09
3	DIA WAS 9.5	2/03/09
4	GENERAL REV.	23/10/09

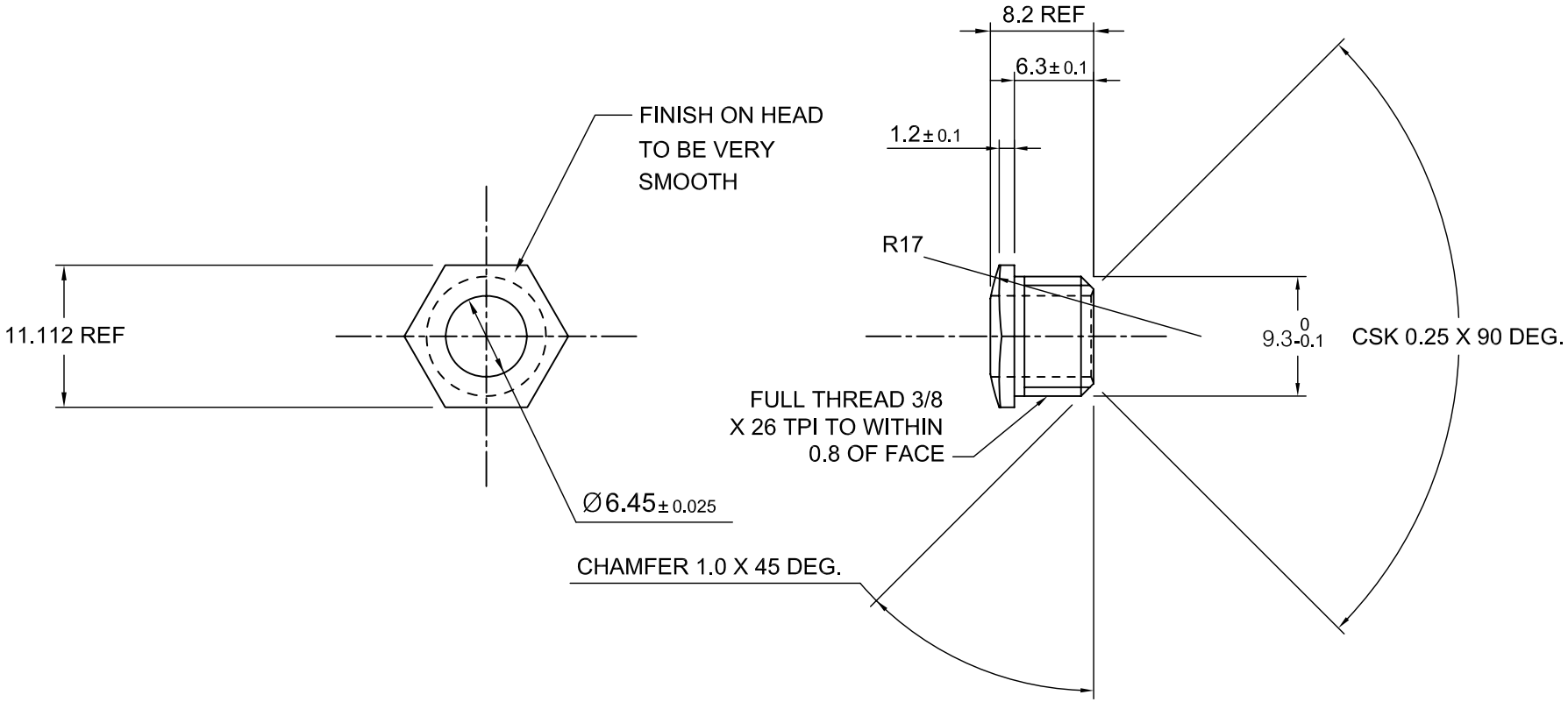

RoHS COMPLIANT

Tolerance

NO DEC. PLACE ±0.50
1 DEC. PLACE ±0.20
2 DEC. PLACE ±0.10
DIA. HOLES ±0.10
ANGLES ±1/2°
UNLESS
OTHERWISE STATED

WHERE USED F.R.

DIMENSIONS IN MILLIMETERS UNLESS OTHERWISE STATED. WORK TO DIMENSIONS. DO NOT SCALE DRAWING. 3rd ANGLE PROJECTION. REMOVE BURRS. IF IN DOUBT ASK.

SCALE N.T.S.

CLIFF

MATERIAL: 0.438 INCH A/F HEX. F.C.BRASS

FINISH: BARREL POLISH & BRIGHT CHROME PLATED

DRAWN: XHZ

APPD : PCS

TITLE: 3/8 X 26 TPI FACIA BUSH 6.3mm CF

DRWG NO : CL1421D

FORM:A4DRWGH